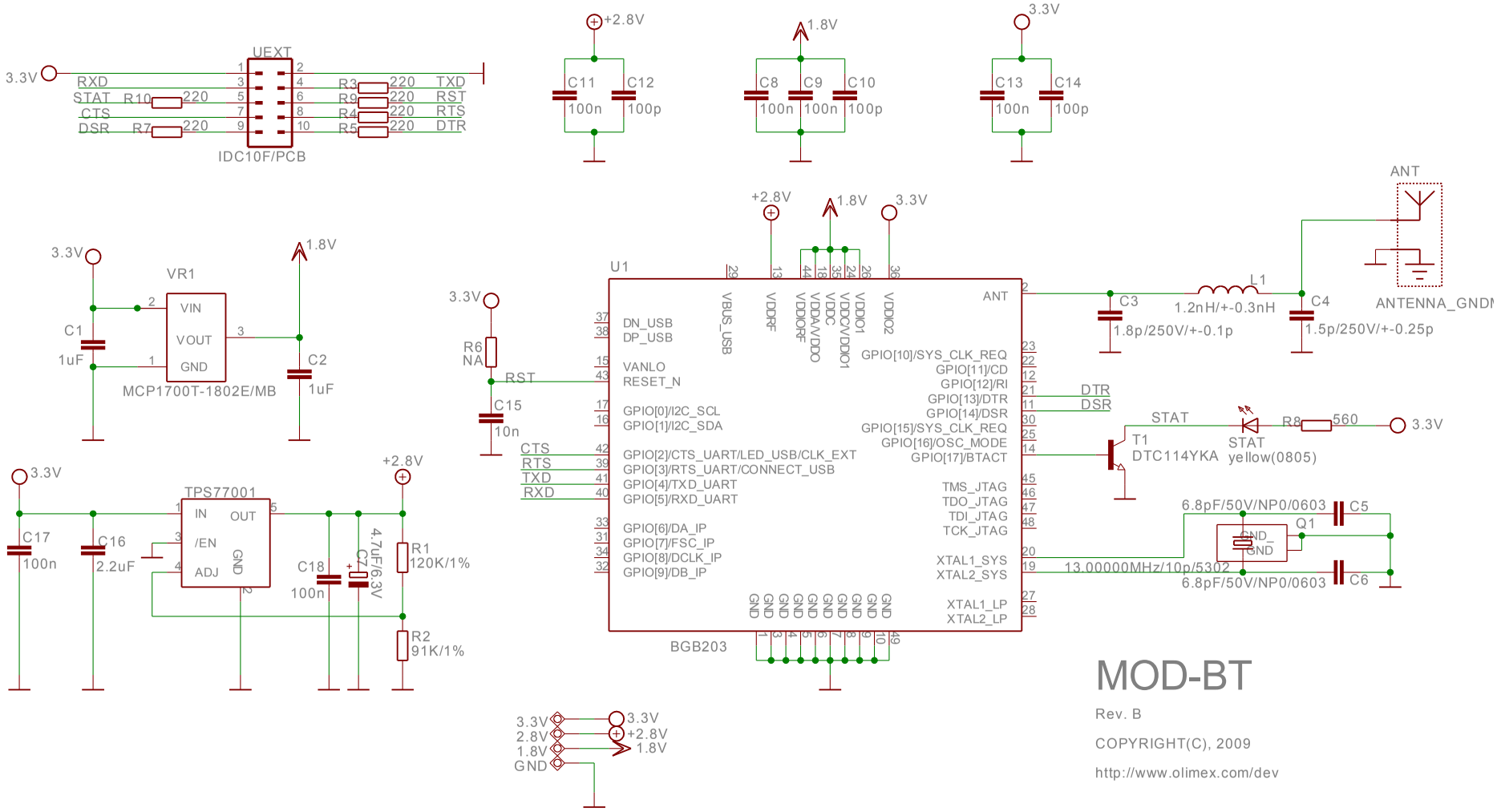
UEXT
IDC10F/PCB
3.3V
RXD
STAT
CTS
DSR
R10 220
R7 220
R3 220 TXD
R9 220 RST
R4 220 RTS
R5 220 DTR
+2.8V
1.8V
C11 100n
C12 100p
C8 100n
C9 100n
C10 100p
C13 100n
C14 100p
VR1
VIN
VOUT
GND
MCP1700T-1802E/MB
C1 1uF
C2 1uF
TPS77001
IN
OUT
/EN
ADJ
C17 100n
C16 2.2uF
C18 100n
C7 4.7uF/6.3V
R1 120K/1%
R2 91K/1%
U1
BGB203
R6 NA
C15 10n
RST
CTS
RTS
TXD
RXD
DN_USB
DP_USB
VANLO
RESET_N
GPIO[0]/I2C_SCL
GPIO[1]/I2C_SDA
GPIO[2]/CTS_UART/LED_USB/CLK_EXT
GPIO[3]/RTS_UART/CONNECT_USB
GPIO[4]/TXD_UART
GPIO[5]/RXD_UART
GPIO[6]/DA_IP
GPIO[7]/FSC_IP
GPIO[8]/DCLK_IP
GPIO[9]/DB_IP
VBUS_USB
VDDRF
VDDORF
VDDA/VDDO
VDDC
VDDC/VDDIO1
VDDIO1
VDDIO2
ANT
GPIO[10]/SYS_CLK_REQ
GPIO[11]/CD
GPIO[12]/RI
GPIO[13]/DTR
GPIO[14]/DSR
GPIO[15]/SYS_CLK_REQ
GPIO[16]/OSC_MODE
GPIO[17]/BTACT
TMS_JTAG
TDO_JTAG
TDI_JTAG
TCK_JTAG
XTAL1_SYS
XTAL2_SYS
XTAL1_LP
XTAL2_LP
GND
DTR
DSR
STAT
T1
DTC114YKA
R8 560
STAT
yellow(0805)
ANT
C3 1.8p/250V/+-0.1p
L1 1.2nH/+-0.3nH
C4 1.5p/250V/+-0.25p
ANTENNA_GND
6.8pF/50V/NP0/0603 C5
Q1
GND_
GND
13.00000MHz/10p/5302
6.8pF/50V/NP0/0603 C6
2.8V
1.8V
GND
MOD-BT
Rev. B
COPYRIGHT(C), 2009
http://www.olimex.com/dev