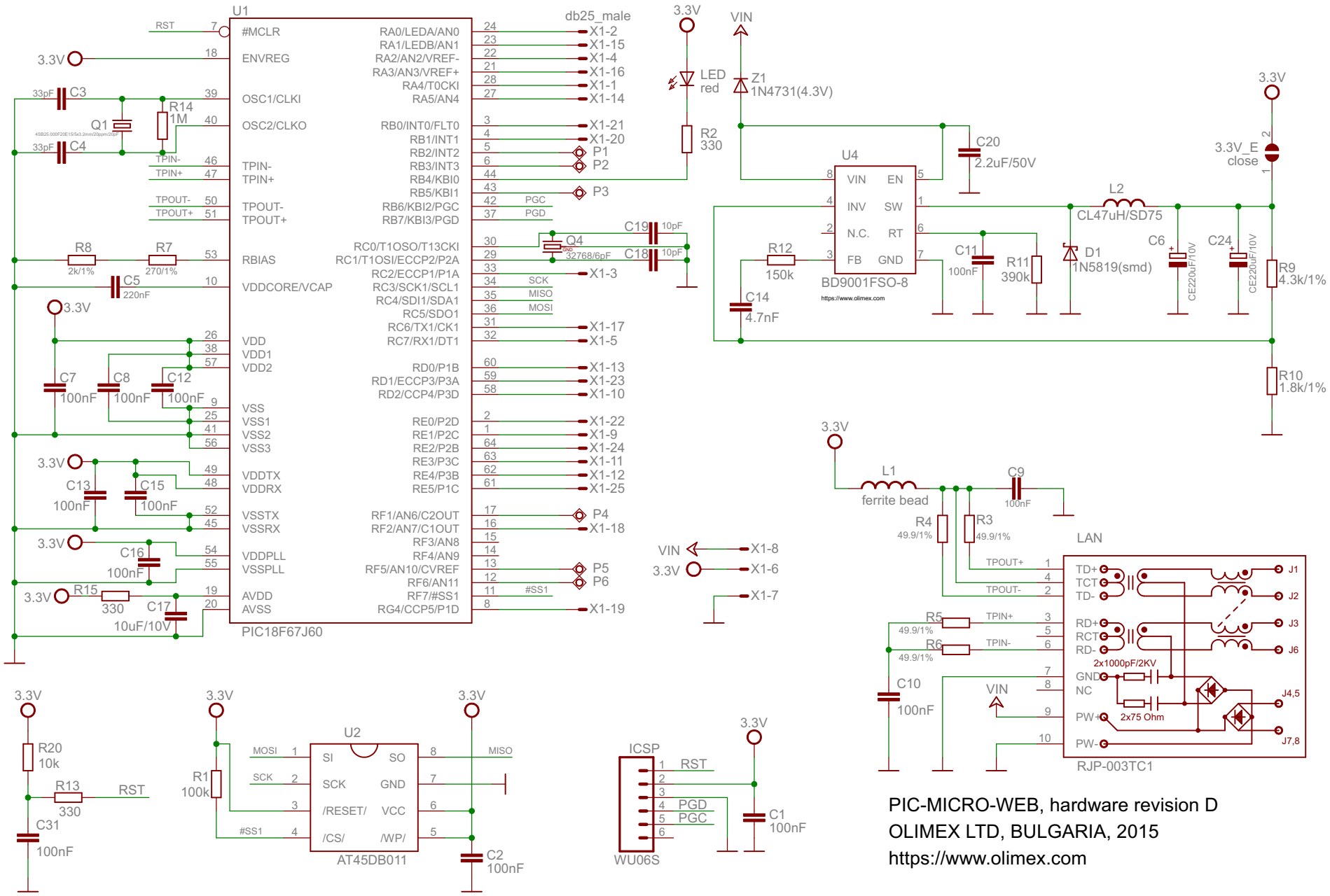
U1
PIC18F67J60
#MCLR
ENVREG
OSC1/CLKI
OSC2/CLKO
TPIN-
TPIN+
TPOUT-
TPOUT+
RBIAS
VDDCORE/VCAP
VDD
VDD1
VDD2
VSS
VSS1
VSS2
VSS3
VDDTX
VDDRX
VSSTX
VSSRX
VDDPLL
VSSPLL
AVDD
AVSS
RA0/LEDA/AN0
RA1/LEDB/AN1
RA2/AN2/VREF-
RA3/AN3/VREF+
RA4/T0CKI
RA5/AN4
RB0/INT0/FLT0
RB1/INT1
RB2/INT2
RB3/INT3
RB4/KBI0
RB5/KBI1
RB6/KBI2/PGC
RB7/KBI3/PGD
RC0/T1OSO/T13CKI
RC1/T1OSI/ECCP2/P2A
RC2/ECCP1/P1A
RC3/SCK1/SCL1
RC4/SDI1/SDA1
RC5/SDO1
RC6/TX1/CK1
RC7/RX1/DT1
RD0/P1B
RD1/ECCP3/P3A
RD2/CCP4/P3D
RE0/P2D
RE1/P2C
RE2/P2B
RE3/P3C
RE4/P3B
RE5/P1C
RF1/AN6/C2OUT
RF2/AN7/C1OUT
RF3/AN8
RF4/AN9
RF5/AN10/CVREF
RF6/AN11
RF7/#SS1
RG4/CCP5/P1D
RST
3.3V
33pF C3
33pF C4
Q1
R14 1M
R8 2k/1%
R7 270/1%
C5 220nF
C7 100nF
C8 100nF
C12 100nF
C13 100nF
C15 100nF
C16 100nF
R15 330
C17 10uF/10V
db25_male
X1-2
X1-15
X1-4
X1-16
X1-1
X1-14
X1-21
X1-20
P1
P2
P3
PGC
PGD
Q4
32768/6pF
C19 10pF
C18 10pF
X1-3
SCK
MISO
MOSI
X1-17
X1-5
X1-13
X1-23
X1-10
X1-22
X1-9
X1-24
X1-11
X1-12
X1-25
P4
X1-18
P5
P6
#SS1
X1-19
LED red
R2 330
VIN
Z1 1N4731(4.3V)
C20 2.2uF/50V
U4
VIN
EN
INV
SW
N.C.
RT
FB
GND
BD9001FSO-8
https://www.olimex.com
R12 150k
C14 4.7nF
C11 100nF
R11 390k
L2 CL47uH/SD75
D1 1N5819(smd)
C6 CE220uF/10V
C24 CE220uF/10V
R9 4.3k/1%
R10 1.8k/1%
3.3V_E close
L1 ferrite bead
C9 100nF
R4 49.9/1%
R3 49.9/1%
R5 49.9/1%
R6 49.9/1%
C10 100nF
LAN
TPOUT+
TPOUT-
TPIN+
TPIN-
TD+
TCT
TD-
RD+
RCT
RD-
GND
NC
PW+
PW-
2x1000pF/2KV
2x75 Ohm
J1
J2
J3
J6
J4,5
J7,8
RJP-003TC1
R20 10k
R13 330
C31 100nF
R1 100k
U2
SI
SCK
/RESET/
/CS/
SO
GND
VCC
/WP/
AT45DB011
C2 100nF
ICSP
WU06S
C1 100nF
PIC-MICRO-WEB, hardware revision D
OLIMEX LTD, BULGARIA, 2015
https://www.olimex.com