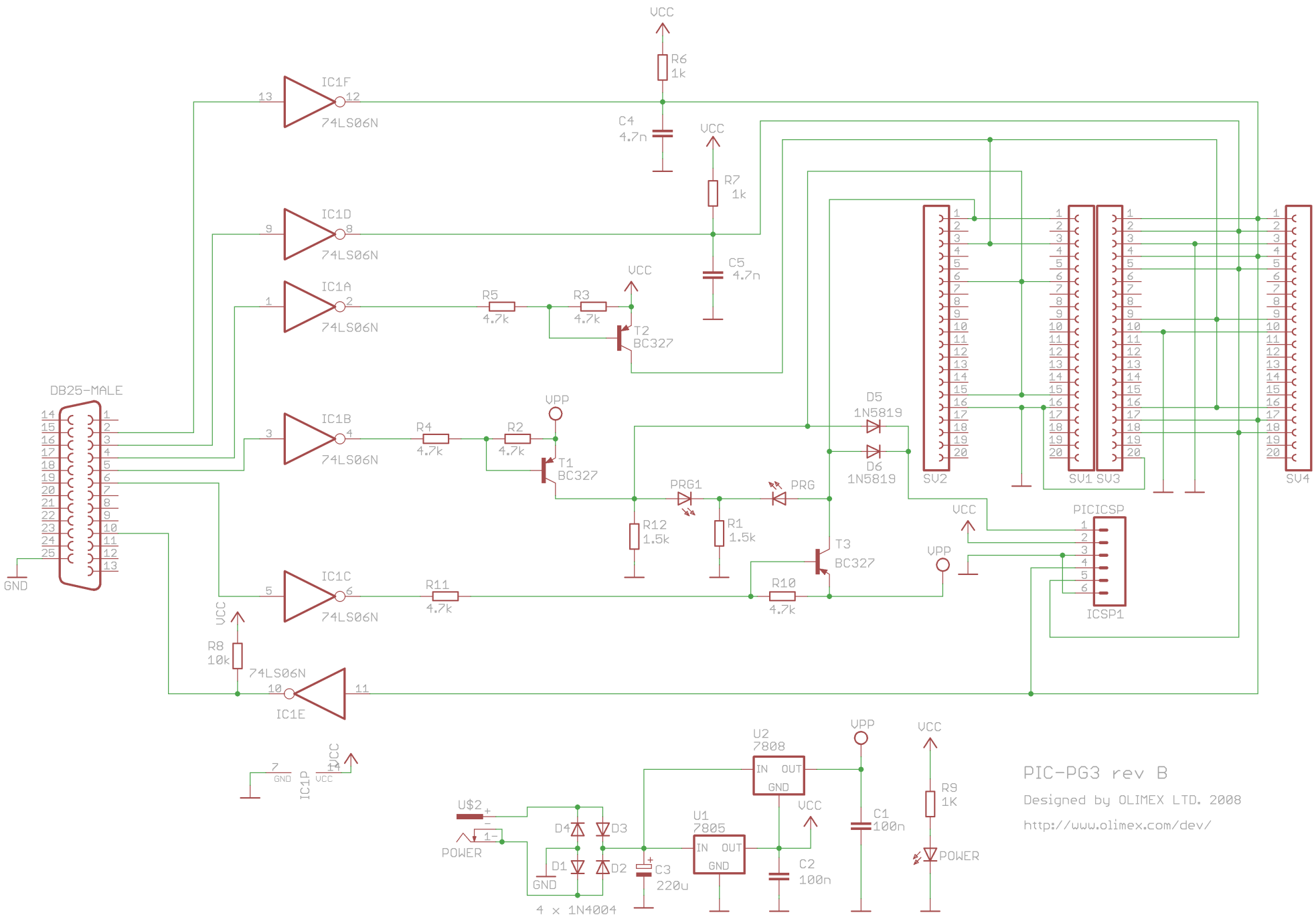
VCC
R6
1k
IC1F
74LS06N
C4
4.7n
VCC
R7
1k
IC1D
74LS06N
C5
4.7n
IC1A
74LS06N
R5
4.7k
R3
4.7k
VCC
T2
BC327
DB25-MALE
GND
IC1B
74LS06N
R4
4.7k
R2
4.7k
VPP
T1
BC327
D5
1N5819
D6
1N5819
PRG1
PRG
R12
1.5k
R1
1.5k
T3
BC327
VPP
VCC
PICICSP
ICSP1
IC1C
74LS06N
R11
4.7k
R10
4.7k
VCC
R8
10k
74LS06N
IC1E
SV2
SV1
SV3
SV4
IC1P
GND
VCC
U$2
POWER
D4
D3
D1
D2
GND
4 x 1N4004
C3
220u
U1
7805
IN OUT
GND
U2
7808
IN OUT
GND
VPP
VCC
C2
100n
C1
100n
R9
1K
POWER
PIC-PG3 rev B
Designed by OLIMEX LTD. 2008
http://www.olimex.com/dev/